CHANCCTV
Sharper Optical Lens

PRODUCT: CH8091AB

1	Type		M12 Lens	
2	Resolution		5MP	
3	Image Format		1/2.5"	
4	Image Circle		ϕ7.5mm(MAX)	
5	EFL		3.75mm	
6	TTL		15.69mm	
7	F/NO.		2.0	
8	FFL（M)		5.04mm	
9	BFL（O)		6.24mm	
10	For Sensor		IMX335	IMX415
11	F.O.V	Horizontal	83°	90°
12		Vertical	62°	49°
13		Diagonal	109°	104°
14	OPT Distortion		<-39%@6.52	<-39%@6.43
15	Relative Ill.		>59%@6.52	>60%@6.43
16	Chief Ray Angle		<17º	
17	M.O.D		0.1m~∞	
18	Mount Type		M12*P0.5	
19	Dimension Figure		ϕ16.0*L10.86mm	
20	Lens Structure		6G	
21	IR-Filter		IR650nm	
22	Waterproof		IP67	
23	Weight		3.5g	
24	Iris Operation		Fixed	
25	Zoom Operation		Fixed	
26	Focus Operation		Manual	
27	Operating Temperature		-25° ~+85°	
28	Storage Temperature		-25° ~+85°	

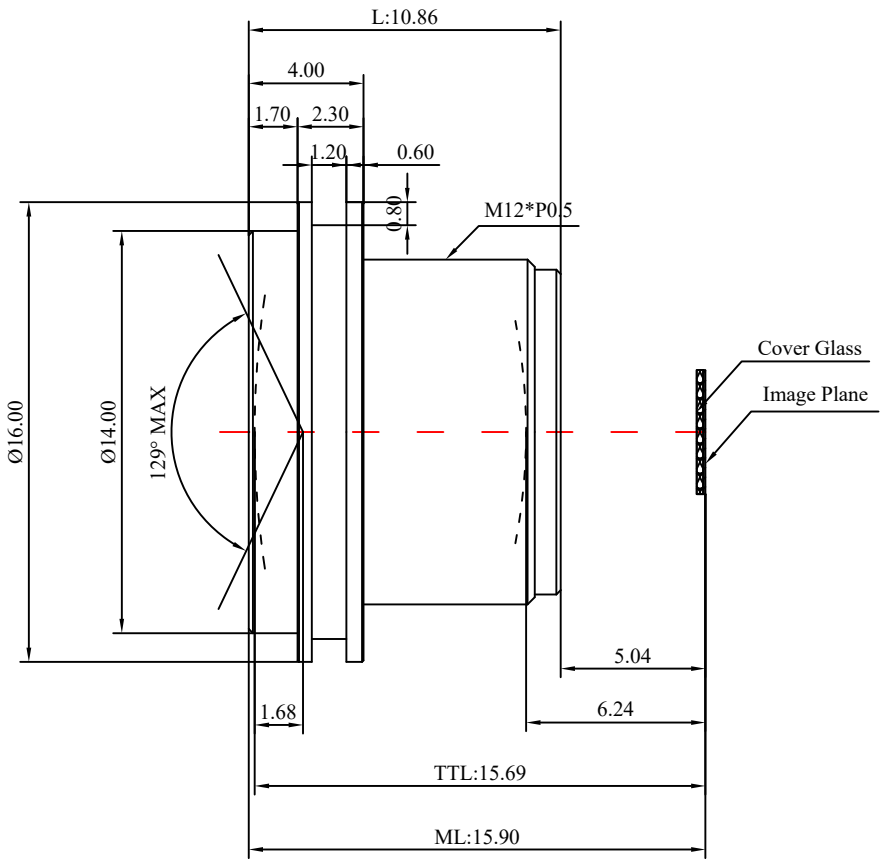

Scale	Remark	Tolerances	Date	Revised	
4:1	X	±0.2	2024-10-11	CH8091AB Rev1.0	
	X.0	±0.15			
Units	X.00	±0.10	Design	Linda	2024-05-03
	X.000	±0.001	Checked	Anna	2024-05-08
mm	Angle	±0.5°	Approval	Sanmu	2024-05-12

福州创安光电科技有限公司
FUZHOU CHUANGAN OPTICS CO., LTD

3D Angle Projection