CHANCCTV
Sharper Optical Lens

# PRODUCT: CH8061AC

| | | | |
|---|---|---|---|
| 1 | Type | | M12 Lens |
| 2 | Resolution | | MP |
| 3 | Image Format | | 1/3.2" |
| 4 | Image Circle | | ϕ6.0mm(MAX) |
| 5 | EFL | | 3.65mm |
| 6 | TTL | | 27.29mm |
| 7 | F/NO. | | 2.8 |
| 8 | FFL（M) | | 5.42mm |
| 9 | BFL（O) | | 5.94mm |
| 10 | For Sensor | | MT9D131 |
| 11 | F.O.V | Horizontal | 64.4° |
| 12 | | Vertical | 50.3° |
| 13 | | Diagonal | 76.5° |
| 14 | OPT Distortion | | <-2.9% |
| 15 | Relative Ill. | | >45% |
| 16 | Chief Ray Angle | | <9.4º |
| 17 | M.O.D | | 0.2m~∞ |
| 18 | Mount Type | | M12*P0.5 |
| 19 | Dimension Figure | | ϕ22.0*L21.87mm |
| 20 | Lens Structure | | 8G |
| 21 | IR-Filter | | BP850nm |
| 22 | Waterproof | | No |
| 23 | Weight | | --- |
| 24 | Iris Operation | | Fixed |
| 25 | Zoom Operation | | Fixed |
| 26 | Focus Operation | | Manual |
| 27 | Operating Temperature | | -25° ~+85° |
| 28 | Storage Temperature | | -25° ~+85° |

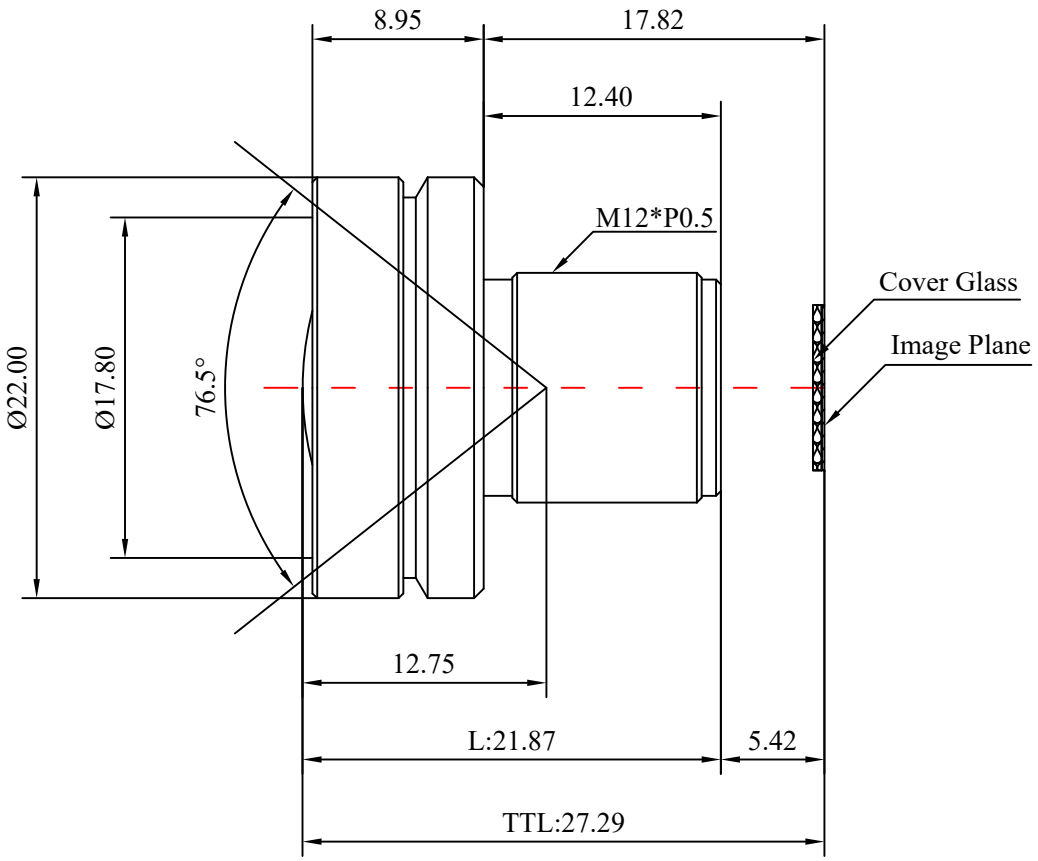


| Scale | Remark | Tolerances | Date | Revised | |
|---|---|---|---|---|---|
| 4:1 | X | ±0.2 | 2024-03-11 | CH8061AC Rev1.0 | |
| | X.0 | ±0.15 | | | |
| Units | X.00 | ±0.10 | Design | Linda | 2024-02-21 |
| | X.000 | ±0.001 | Checked | Anna | 2024-02-26 |
| mm | Angle | ±0.5° | Approval | Sanmu | 2024-03-04 |

福州创安光电科技有限公司
FUZHOU CHUANGAN OPTICS CO., LTD

3D Angle Projection